MIT | Academy of Engineering

(An Autonomous Institute Affiliated to Savitribai Phule Pune University)

PROJECT TITLE :- SMART GUARD (A SIMPLIFIED BOOLEAN LOGIC ALARM SYSTEM)

DIGITAL ELECTRONICS ENGINEERING LABORATORY [2307103L]

FY B.Tech. (SEM I)

SUBMITTED BY

SHWETA SACHIN SHINDE [202501040359]

SAMRUDDHI BHAUSAHEB MATE [202501040361]

COURSE TEACHER

(Mrs. Uttara Dongre)

DEPARTMENT OF ELECTRONICS AND TELECOMMUNICATION ENGINEERING,

MIT ACADEMY OF ENGINEERING, ALANDI (D), PUNE-412105
MAHARASHTRA (INDIA)

DECEMBER-2025

CONTENTS

Abstract			I
1.	Introduction		1
	1.1	Motivation for the project	
	1.2	Problem Statement	
	1.3	Conceptual Sketches of Problem	
2.	Operation of Project		3
	2.1	Block Diagram	
	2.2	Working (Step by Step)	
	2.3	Bill of Material (List of all components & Cost of Project)	
3.	Digital System Design		5
	3.1	Identification of Input and Output variables	
	3.2	Truth Table	
	3.3	Logic Equation	
	3.4	Identification of Min Terms or Max Terms	
	3.5	K-Map	
	3.6	Step by Step Simplification of Logic Equation	
	3.7	Optimization of Logic Equation	
	3.8	Logic Circuit Diagram	
	3.9	Selection of ICs (Pin Diagrams)	
4.	Simulation (Results of All Conditions)		

5.	Implementation and Results	
	5.1 Verification by Results Table/State Table	
	5.2 Calculations	
	5.3 Graphs and Analysis	
	5.4 Waveforms Analysis	
	5.5 Photographs of Working Project	
	5.6 Photographs of all conditions of results	
6.	Conclusion and Future scope	
References		
Appendix -1 (Datasheets of ICs and Components used First page only)		
Appendix -2 1. Project Photographs 2. Students Team Photographs while working 3. Table of Photographs of all Team members [Students Photograph/Name/PRN]		
Appendix -3 Power point presentation of Project (04 Slides per Page)		
Appendix -4 1. Google Drive Link for 03 minutes Video on Working Project 2. Google Drive Link for Poster of Project		

ABSTRACT

This project is about building a Smart Security Alarm that only rings when the system is Armed and a sensor (Motion, Door, or Window) is triggered. By using a K-Map, we simplified the logic so that the system works perfectly using the smallest number of parts possible.

We successfully designed a circuit that is cheap to build, easy to wire, and 100% accurate. The final design shows how simple logic gates can be used to create reliable safety tools for any home or office.

1. INTRODUCTION

1.1 Motivation

With the increasing need for safety and security in homes, offices, and laboratories, alarm systems have become an essential part of modern life. Most security systems are based on simple logical decisions such as detecting motion, door opening, or window opening.

This project is motivated by the need to understand how basic digital logic concepts, such as Boolean algebra and Karnaugh Maps, can be applied to design a real-world alarm system.

By developing this alarm system using logic gates, students can bridge the gap between theoretical digital electronics and practical applications, while also learning how system arming plays a crucial role in avoiding false alarms.

1.2 Problem Statement

Design and implement a digital alarm control system using Boolean logic that activates an alarm only when the system is armed and any one or more security conditions are violated. The alarm system should monitor the following conditions:

- Motion detection
- Door opening
- Window opening
- System arming status

The alarm must not activate if the system is not armed, even if motion, door, or window activity is present.

1.2 Conceptual Sketch of Problem

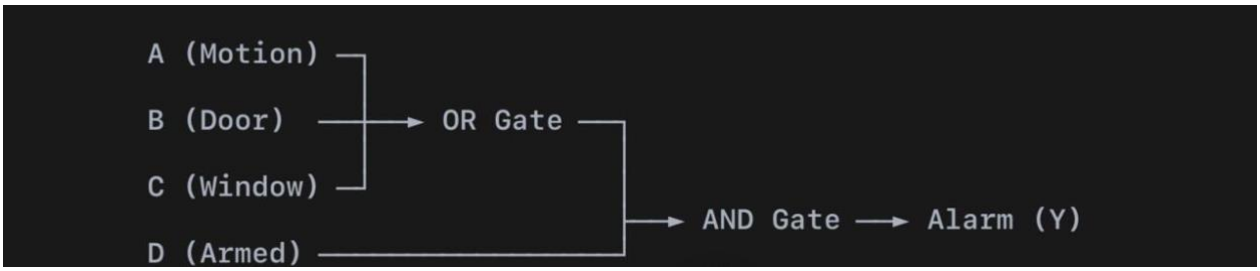

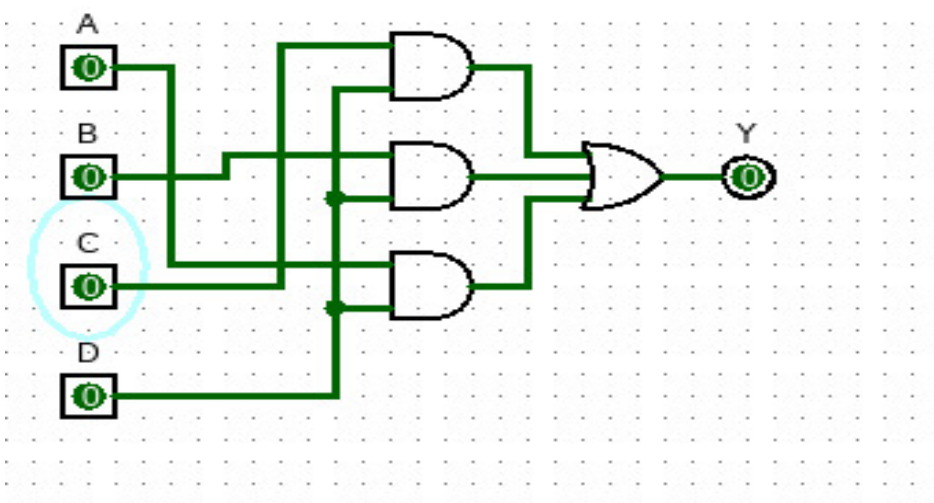

Explanation:

- Inputs A, B, and C are connected to an OR gate.
- The output of the OR gate is connected to one input of an AND gate.
- Input D (System armed) is connected to the other input of the AND gate.
- The output of the AND gate controls the alarm.

2.2 Working (Step by Step)

The working of the alarm system is based on four input conditions: motion detection, door opening, window opening, and system arming. The system uses basic logic gates to decide when the alarm should be activated.

Step 1: System Initialization

- The alarm system is powered using a 5V DC supply.
- All logic gates and input switches are initialized.
- Initially, the system remains inactive until the system is armed.

Step 2: Monitoring Intrusion Inputs

- Three inputs A (Motion), B (Door), and C (Window) continuously monitor intrusion activities.
- Each input can have two states:
- 0 → No activity
- 1 → Activity detected

Step 3: OR Gate Operation

- Inputs A, B, and C are connected to an OR gate.
- The OR gate checks whether any one or more of the intrusion conditions are active.
- If any input among A, B, or C becomes 1, the OR gate output becomes 1.
- If all three inputs are 0, the OR gate output remains 0.

Step 4: System Arming Check

- Input D represents the system armed status.
- When:
- D = 1 → System is armed
- D = 0 → System is disarmed

Step 5: AND Gate Decision

- The output of the OR gate is connected to one input of an AND gate.
- Input D (System armed) is connected to the other input of the AND gate.
- The AND gate ensures that the alarm activates only when both conditions are true:

1. System is armed (D = 1)
2. At least one intrusion is detected (A + B + C = 1)

Step 6: Alarm Activation

- When both conditions are satisfied, the AND gate output becomes 1.
- This output activates the alarm (LED/Buzzer).
- If either condition is false, the alarm remains OFF.

Step 7: False Alarm Prevention

- If motion, door, or window activity occurs while the system is not armed (D = 0):
- The AND gate output remains 0
- Alarm does not activate
- This prevents false alarms during normal usage.

3.1 Identification of Input and Output Variables

Input Variables

Variable	Description
A	Motion detected
B	Door open
C	Window open
D	System armed

Each input can take two values:

- 0 → Condition not present
- 1 → Condition present

Output Variable

Variable	Description
Y	Alarm output

- Y = 1 → Alarm ON
- Y = 0 → Alarm OFF

3.2 Truth Table Reference (DABC order)

D	A	B	C	Y
1	0	0	1	1
1	0	1	0	1
1	0	1	1	1
1	1	0	0	1
1	1	0	1	1
1	1	1	0	1
1	1	1	1	1

3.3 Logic Equation

Logical Condition

The alarm should activate only when:

- The system is armed (D = 1)
- At least one intrusion condition exists (A, B, or C)

Boolean Logic Equation

$Y = D (A + B + C)$

Where:

- + denotes OR operation
- · denotes AND operation

3.4 Identification of Minterms

The output Y = 1 when:

- D = 1
- At least one of A, B, or C is 1

List of Minterms

$Y = \Sigma m (9, 10, 11, 12, 13, 14, 15)$

Identification of Maxterms (Optional)

The alarm is OFF (Y = 0) when:

- D = 0 (system disarmed), OR

- D = 1 and A = B = C = 0

List of Maxterms

Y = Π M (0, 1, 2, 3, 4, 5, 6, 7, 8)

3.5 K-Map

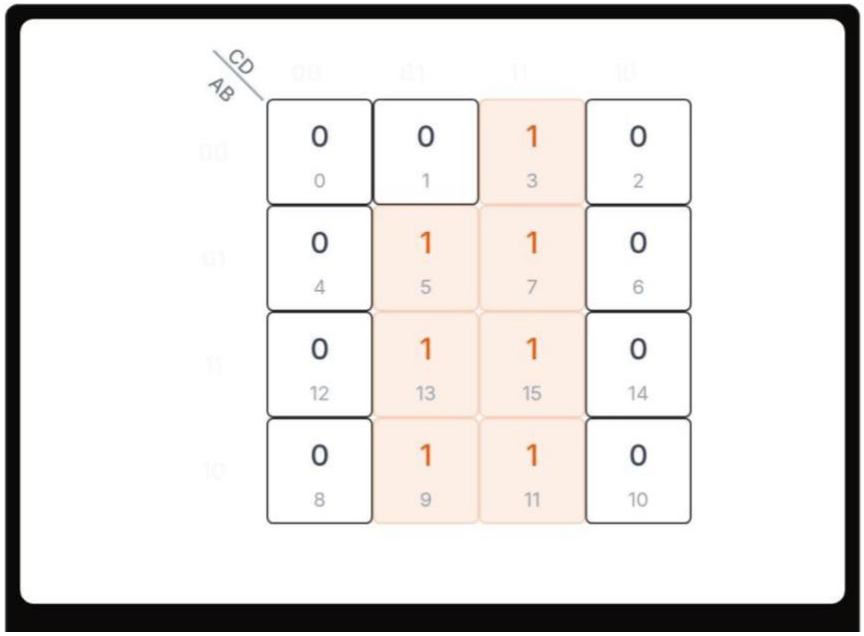

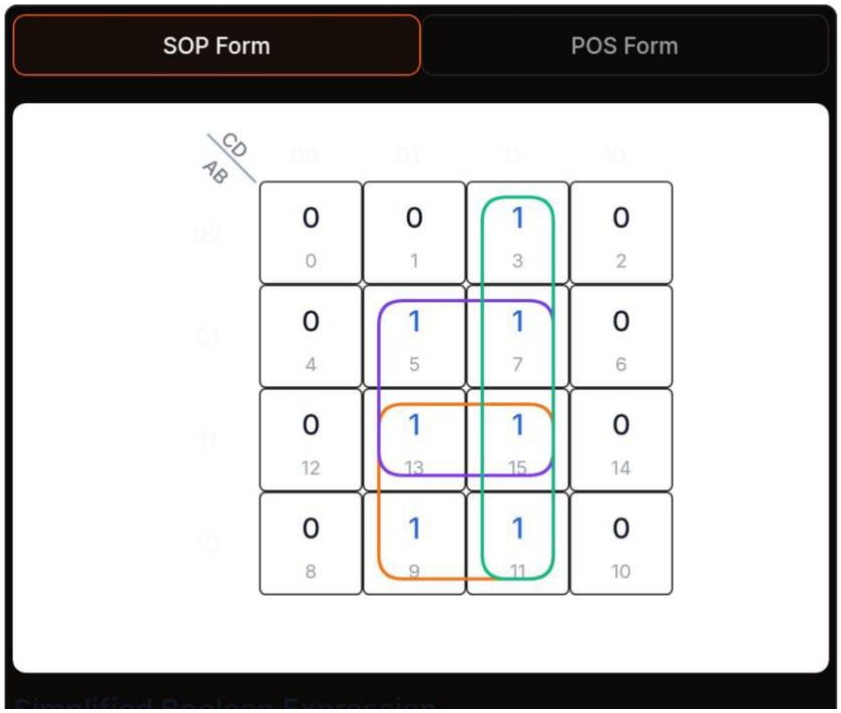

3.6 Step by Step Simplification of Logical Equation

Step 1: Write the Sum of Products (SOP)

From our K-Map, we identified three groups of "1"s where the Alarm is active. Each group represents a scenario where the system is Armed (D) and one sensor is tripped.

The initial equation is:

* Group 1 (A.D): Motion detected AND System Armed.

* Group 2 (B.D): Door open AND System Armed.

* Group 3 (C.D): Window open AND System Armed.

Step 2: Apply the Distributive Law

In Boolean algebra, just like in regular math, if you have a common factor, you can pull it out. Here, D is common to all three terms.

Simple Rule: X.Y + X.Z = X(Y + Z)

Step 3: Final Simplified Expression

$$Y = D.(A + B + C)$$

3.7 Logic Circuit Diagram

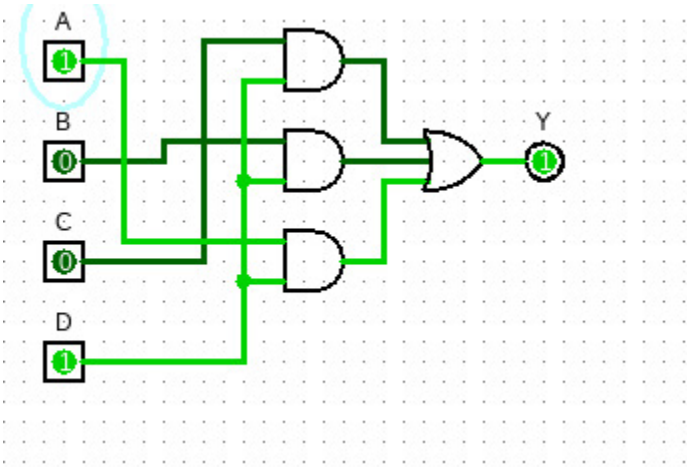

3.8 Selection of ICs

1) AND

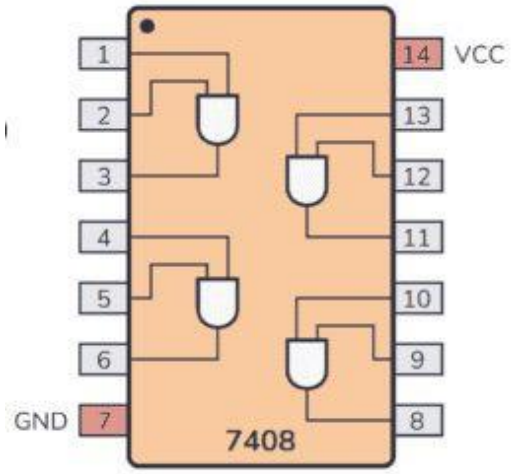

2) OR

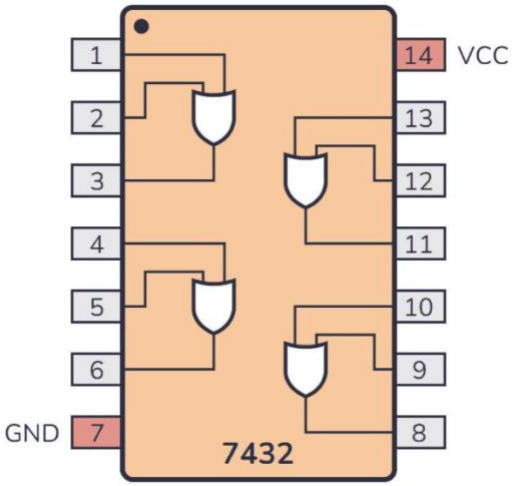

4.Simulation

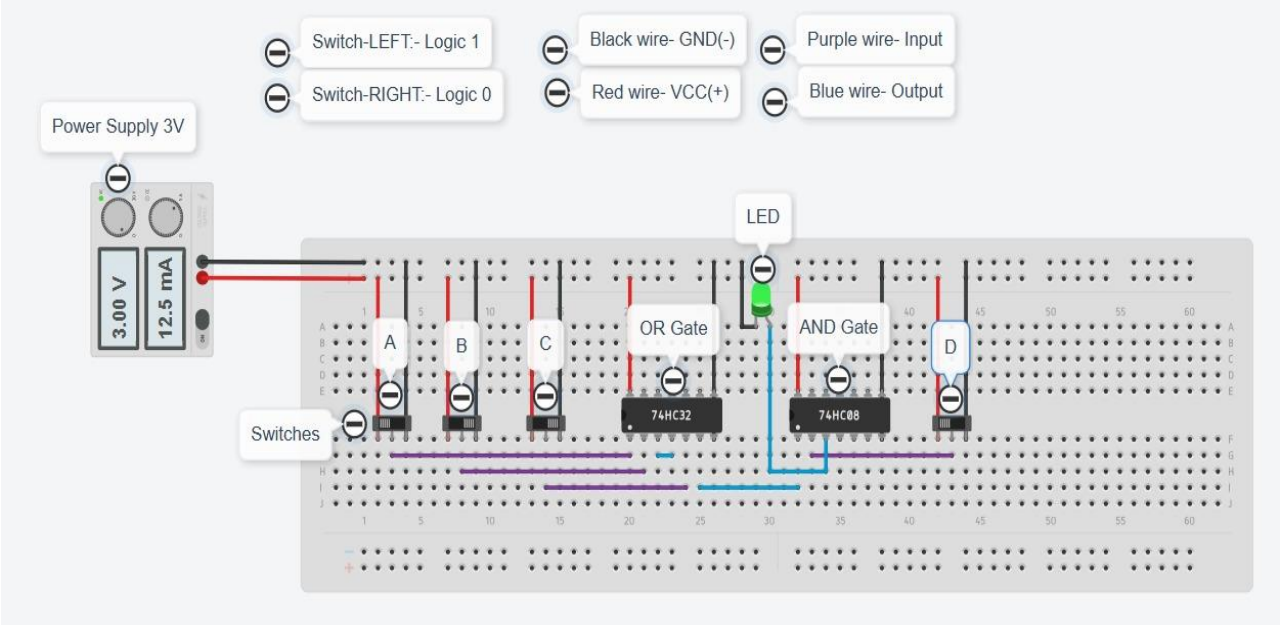

CODE

```
#include <stdio.h>
int main()
{
int A, B, C, D;   // Input variables
int Alarm;      // Output variable
// Input values
// A = Motion detected (0 or 1)
// B = Door open (0 or 1)
// C = Window open (0 or 1)
// D = System armed (0 or 1)
printf("Enter Motion detected (A = 0 or 1): ");
scanf("%d", &A);
printf("Enter Door open (B = 0 or 1): ");
scanf("%d", &B);
printf("Enter Window open (C = 0 or 1): ");
scanf("%d", &C);
printf("Enter System armed (D = 0 or 1): ");
scanf("%d", &D);
// Alarm Logic
// Alarm = D AND (A OR B OR C)
Alarm = D && (A || B || C);
// Output result
if (Alarm == 1)
printf("\nAlarm Status: ON \n");
else
printf("\nAlarm Status: OFF\n");

return 0;
}
```

OUTPUT

```
C:\Users\Victus\OneDrive\Do

Enter Motion detected (A = 0 or 1): 0
Enter Door open (B = 0 or 1): 1
Enter Window open (C = 0 or 1): 0
Enter System armed (D = 0 or 1): 1

Alarm Status: ON

--------------------------------
Process exited after 92.52 seconds with return va
lue 0
Press any key to continue . . .
```